ZEN Fireplace Surround

TOP VIEW

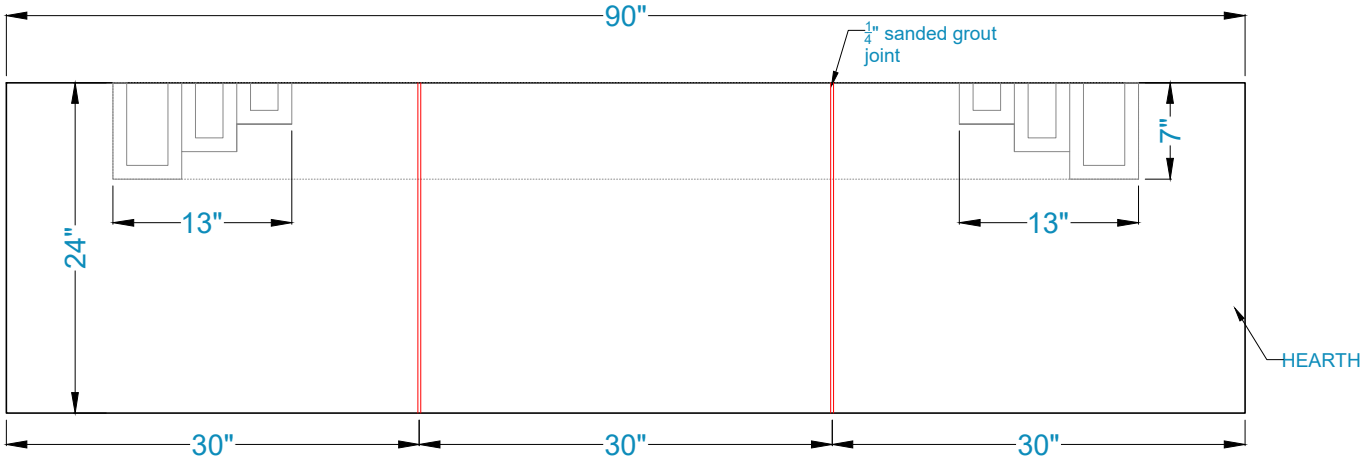

ELEVATION

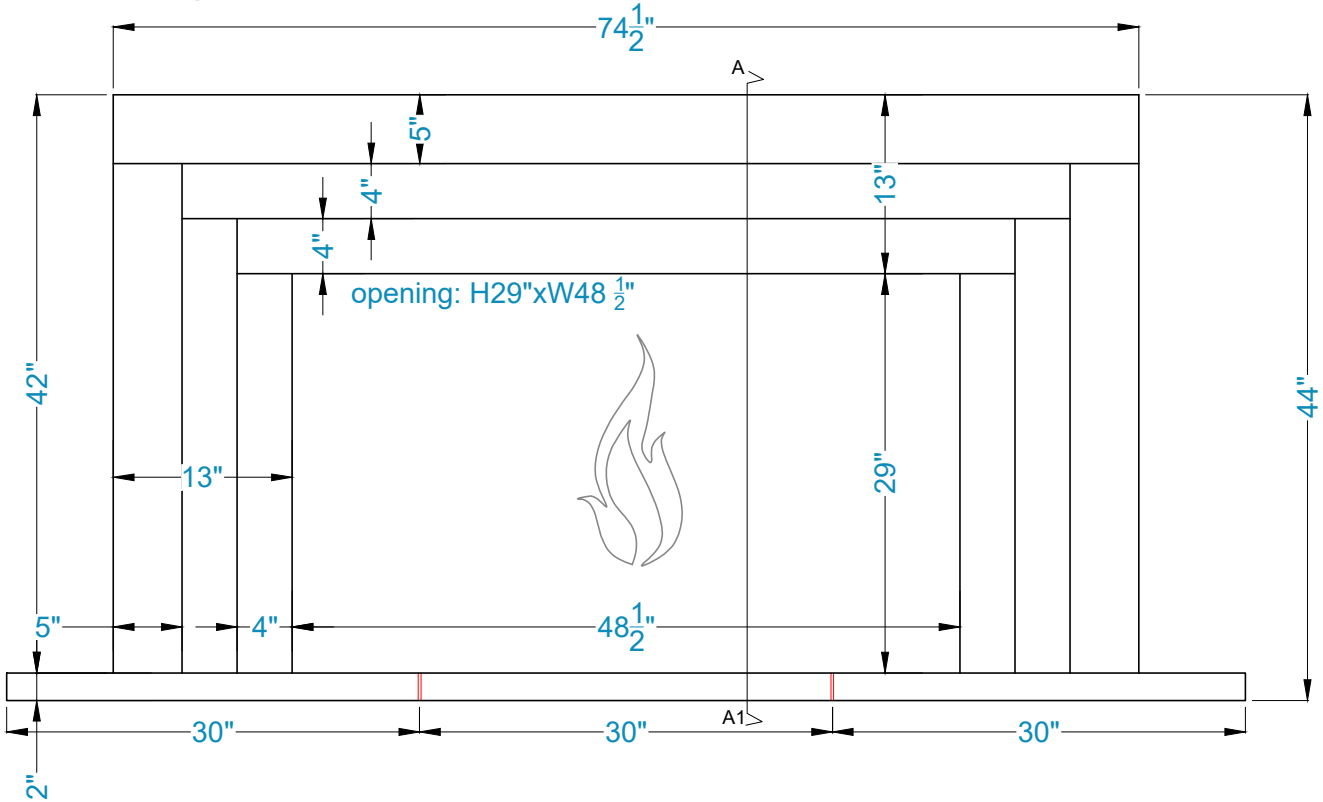

SECTION A-A1

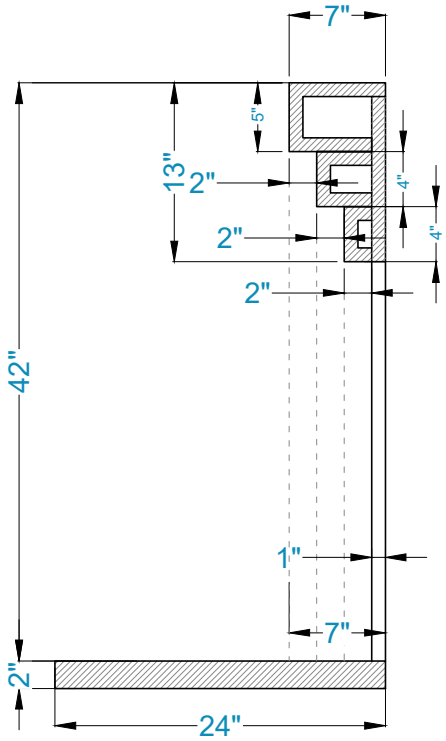

LA PRECAST mantels