TOP VIEW

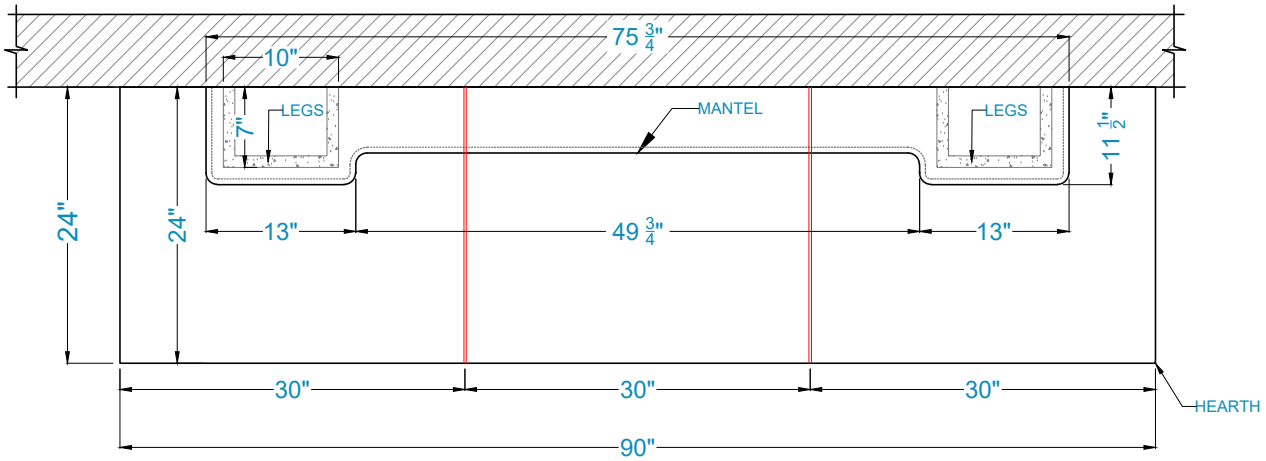

GREAT HAYK Fireplace Surround

FRONT VIEW

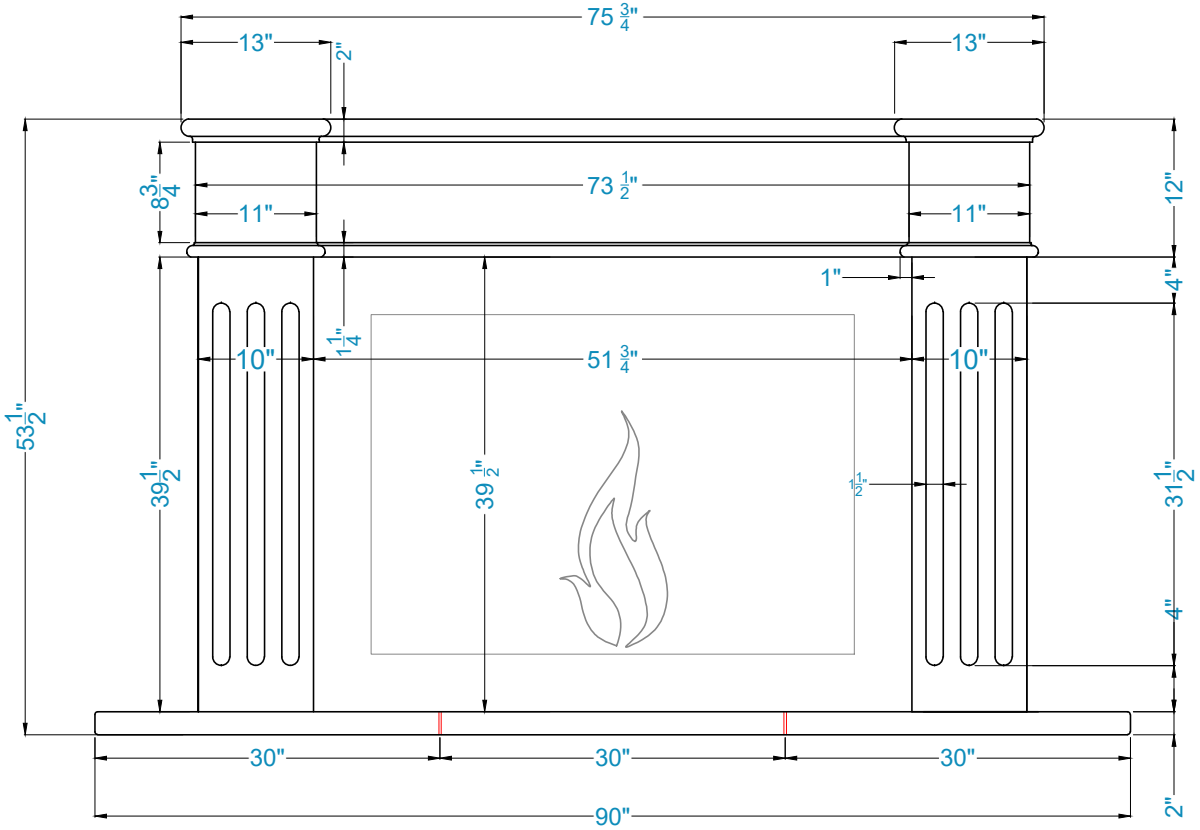

SIDE VIEW

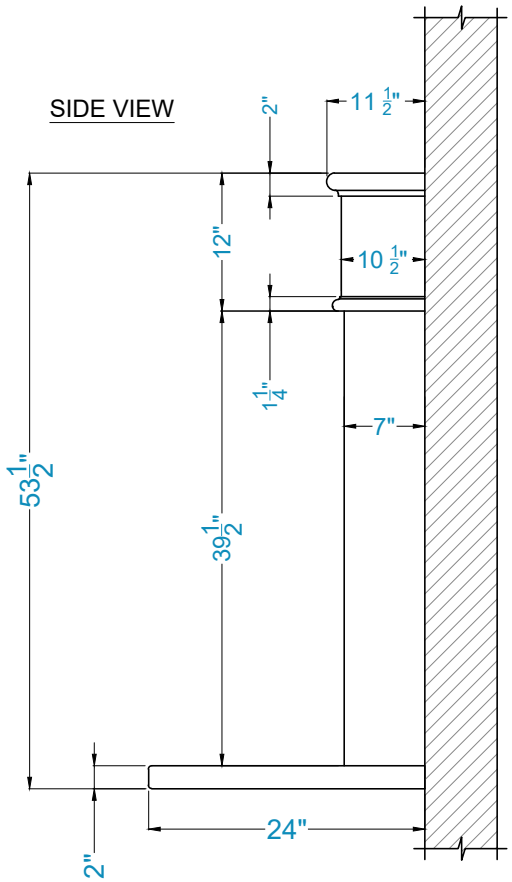

LA PRECAST mantels