NEW YORK Fireplace Surround

TOP VIEW

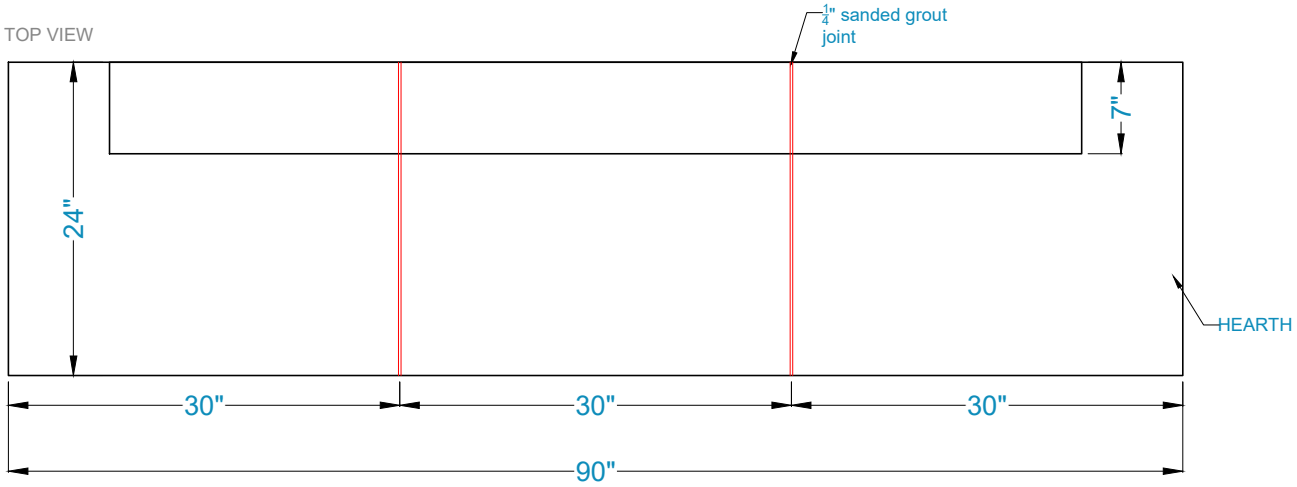

ELEVATION

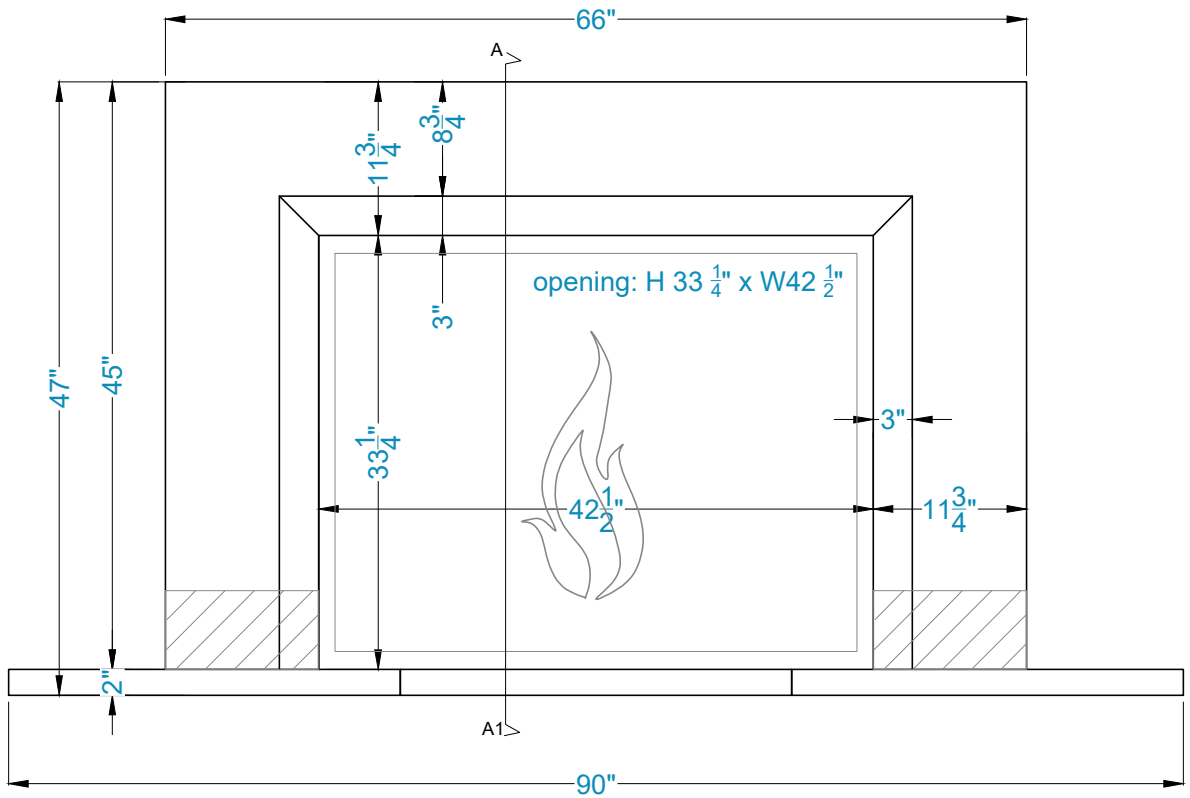

SECTION A-A1

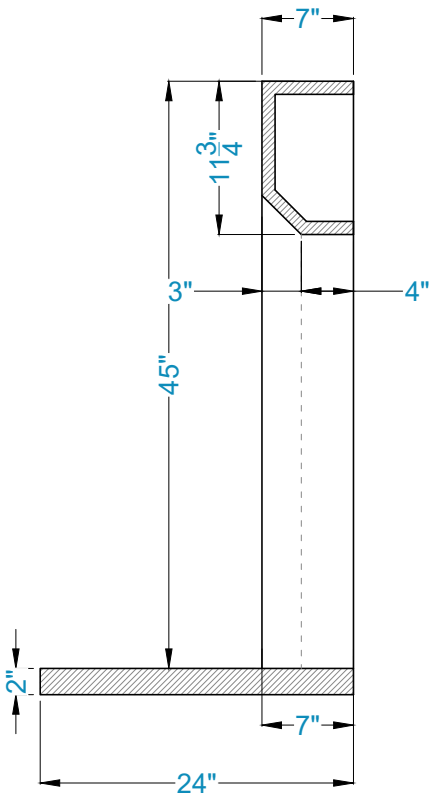

Legend

-Adjustable part (cut to fit)

LA PRECAST mantels