MEDICHI Fireplace Surround

TOP VIEW

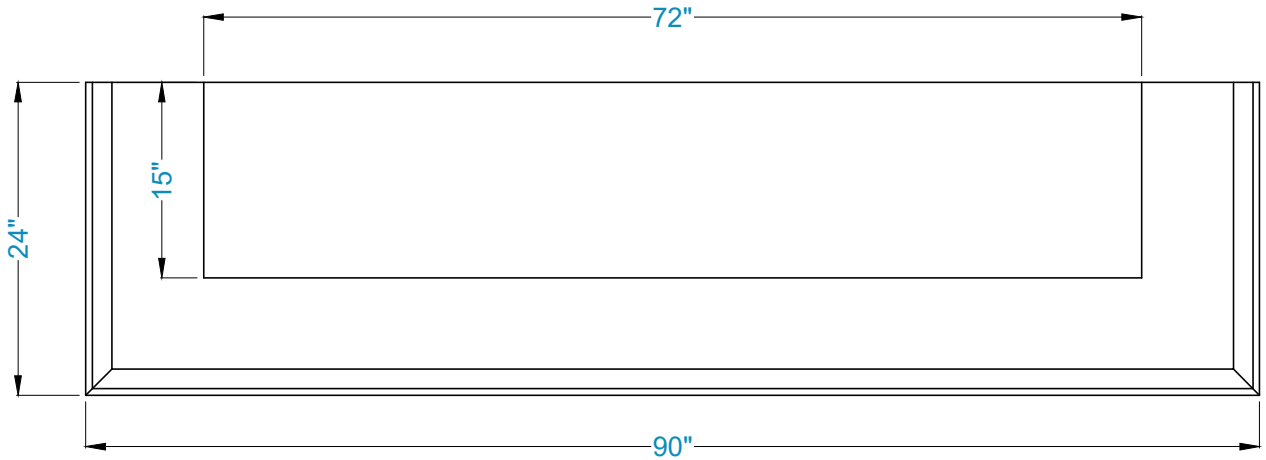

FRONT VIEW

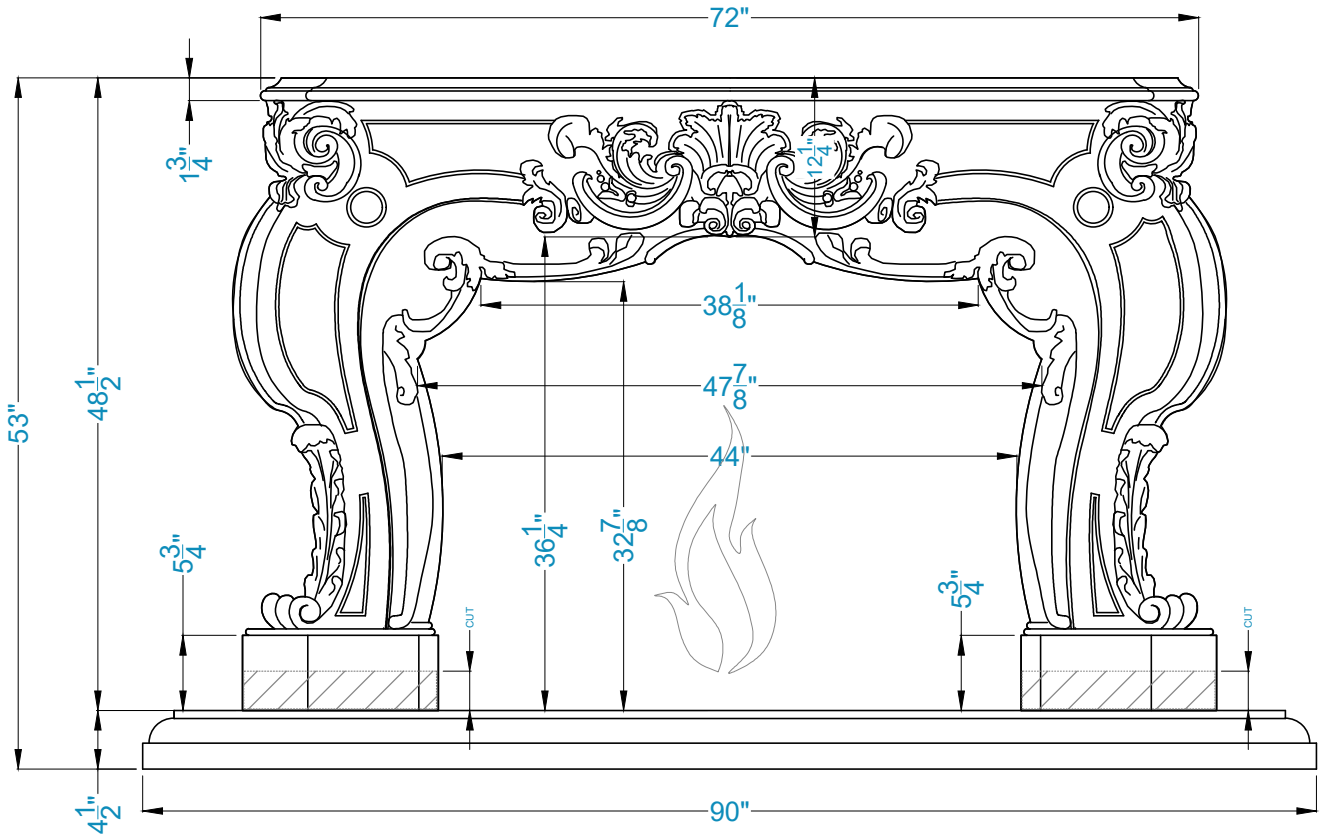

SIDE VIEW

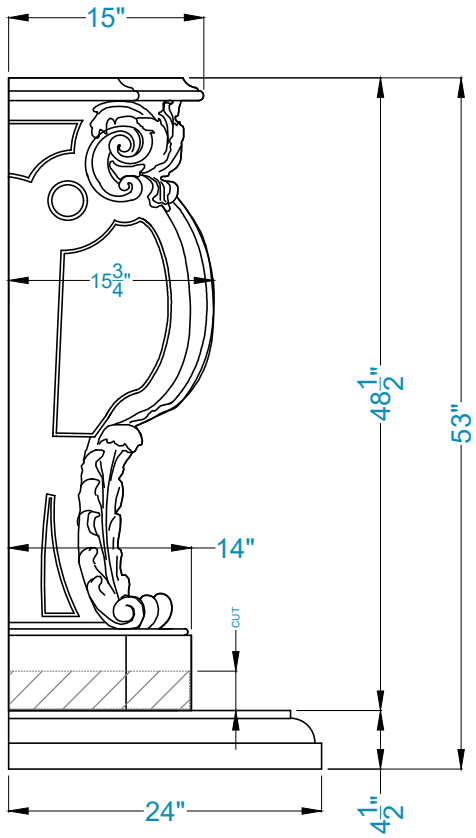

Legend

FS-55

-Adjustable part (cut to fit)

LA PRECAST mantels