ERICA FIREPLACE SURROUND

TOP VIEW

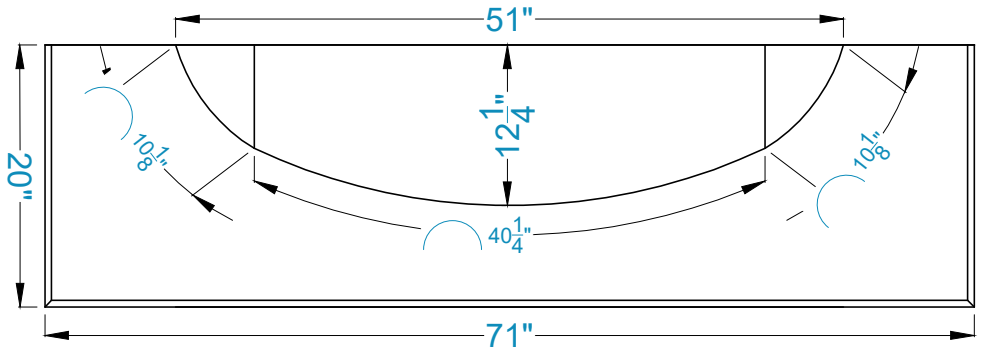

FRONT VIEW

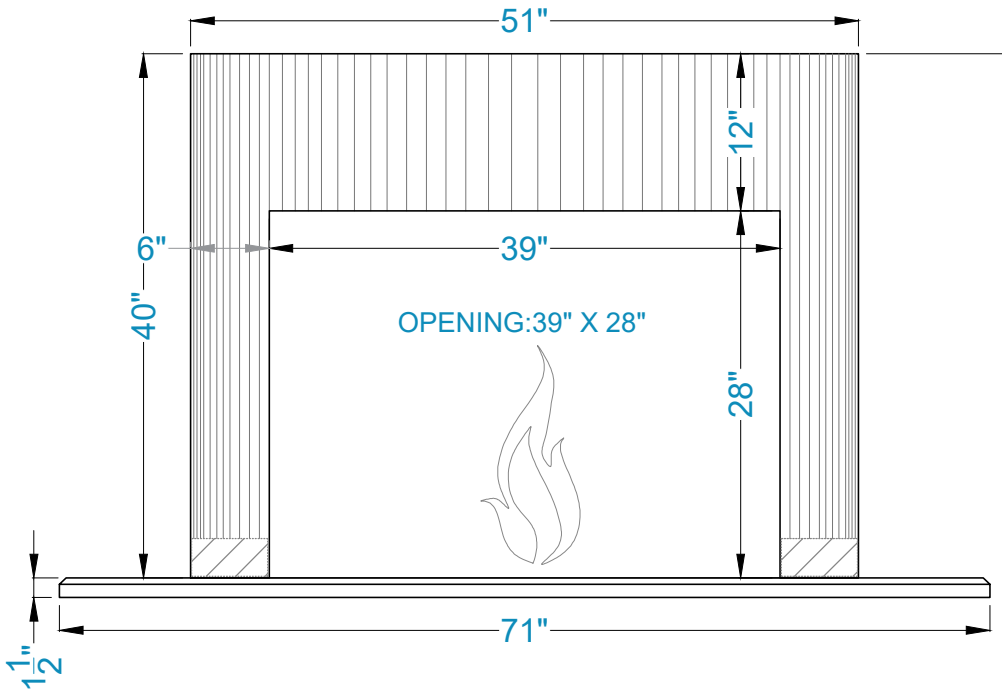

SIDE VIEW

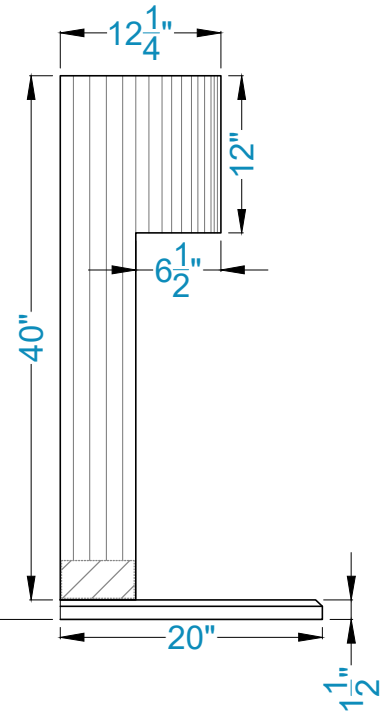

Legend

FS-98 FH-4

-Adjustable part (cut to fit)