TOP VIEW

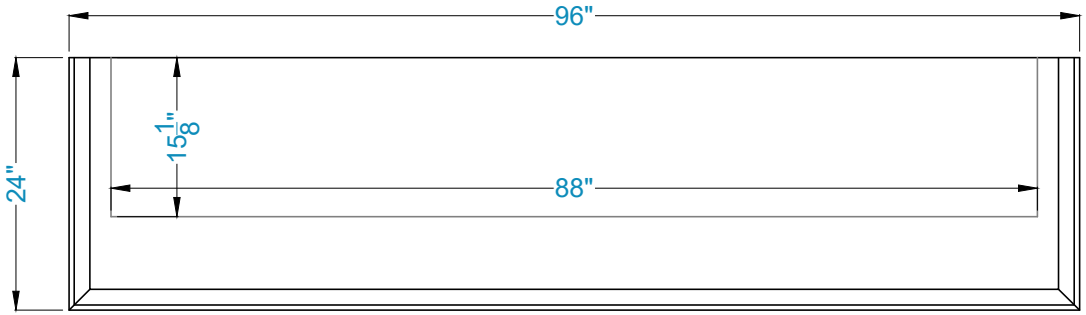

FRONT VIEW

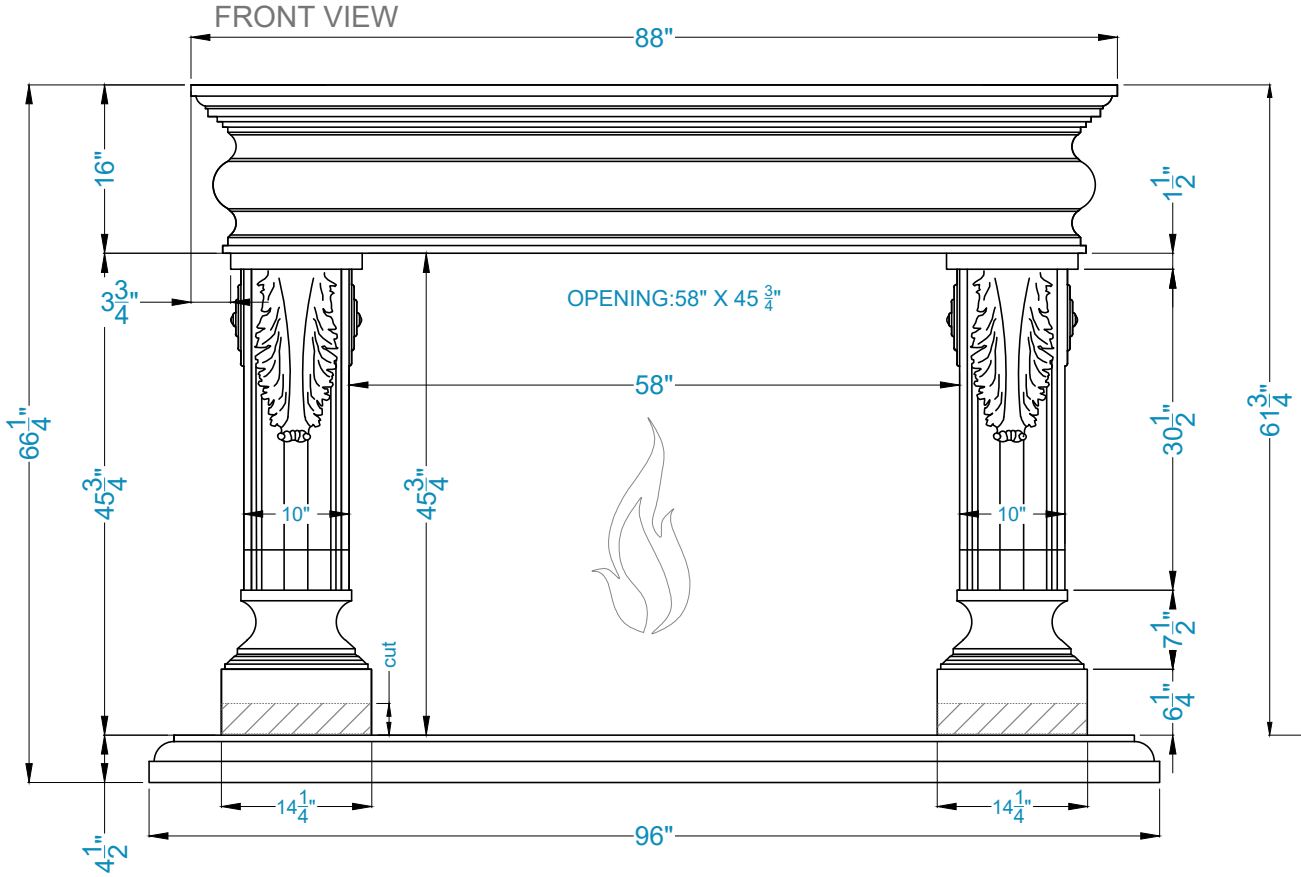

SIDE VIEW

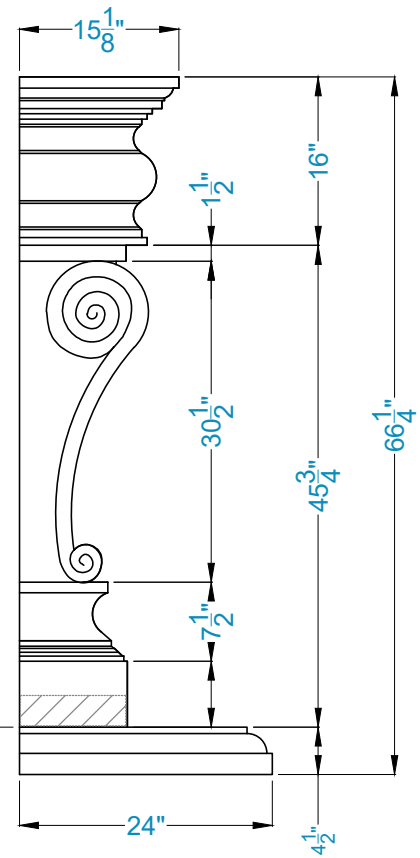

Legend

FS-75 FH-12	-Adjustable part (cut to fit)