TOP VIEW

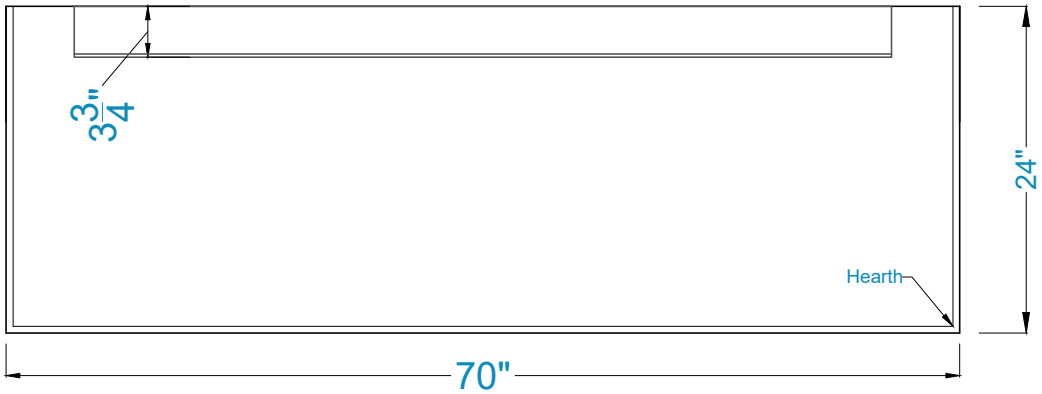

FRONT VIEW

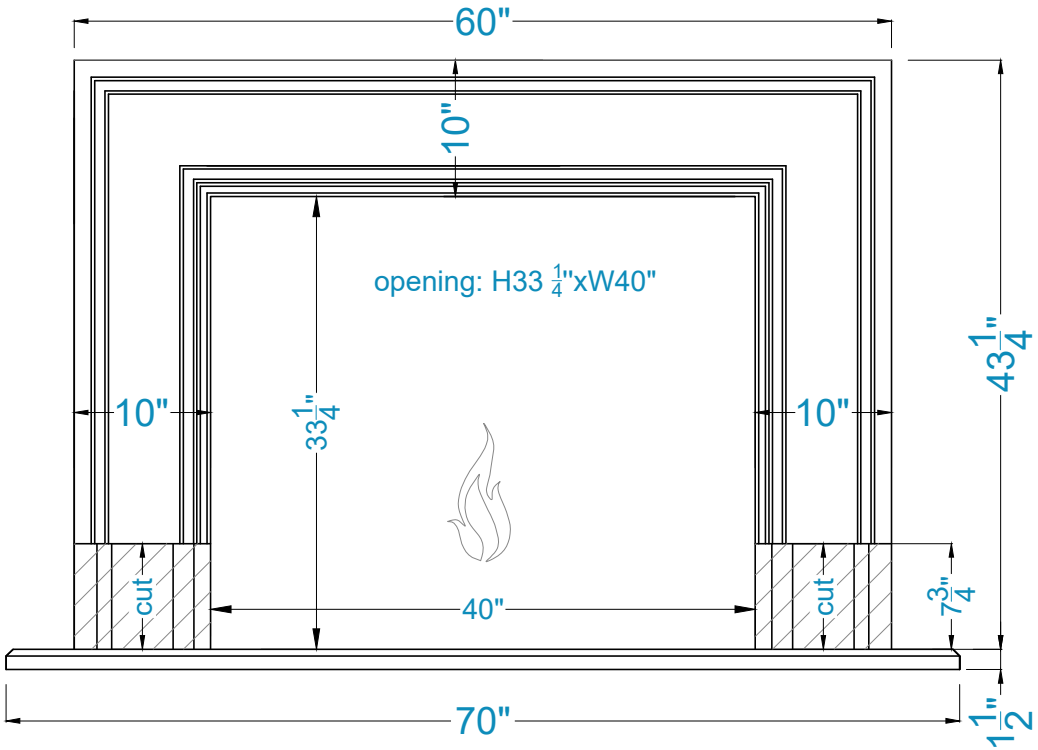

SIDE VIEW

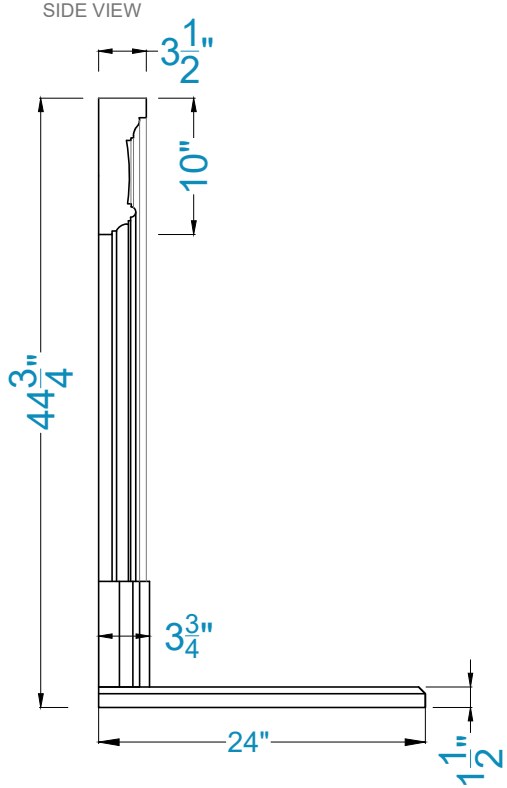

Legend

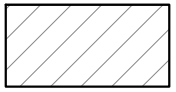

-Adjustable part (cut to fit)

LA PRECAST mantels